aquatica®

Function, Form & Fashion

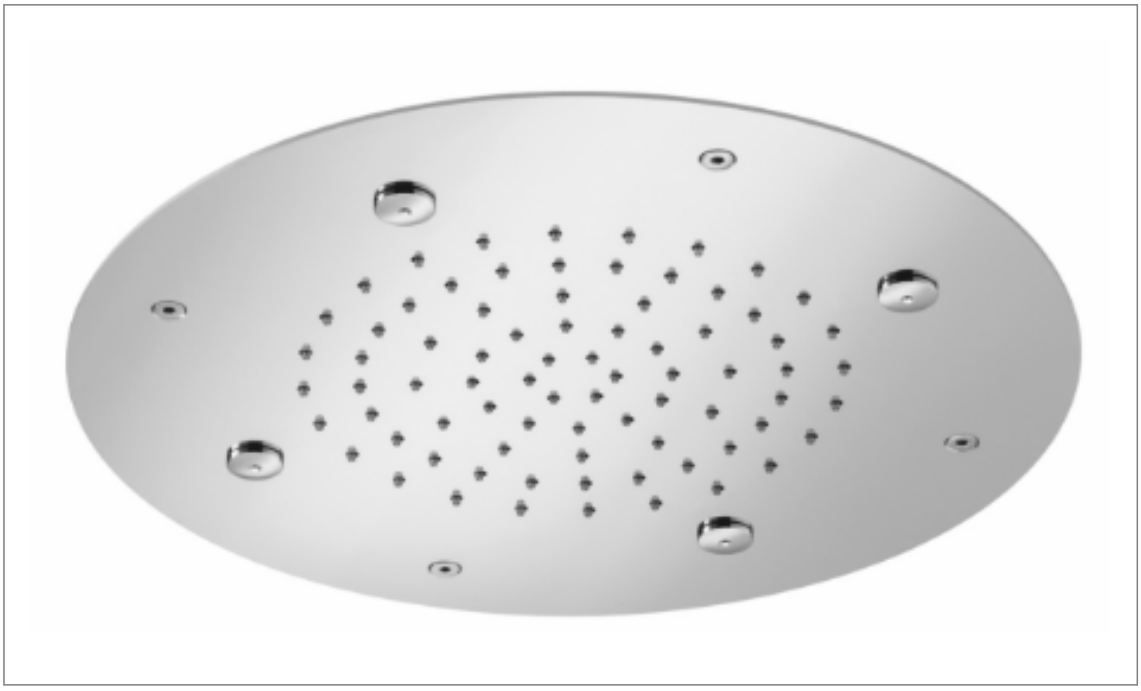

Spring RD-380 / SQ-380 / SQ-300

Built-In Shower Head

Installation & Care Manual

USA/Canada

Aquaticausa.com
Aquaticabath.ca
E: info@aquaticabath.com

aquatica®
Function : Form : Fashion

Spring RD-380/SQ-380/SQ-300

Built-In Shower Head

TWO PEOPLE REQUIRED FOR INSTALLATION

NOTICE TO HOMEOWNER

- We recommend that this product is installed by a qualified professional plumber.
- Please check this product immediately to ensure that it has not been damaged and is complete. Before installation, please make sure this product is the correct model and you have all the parts required for installation and use.
- Please flush the water system to ensure that no metal swarf, solder, and other impurities can enter the product.
- Turn off water supply before commencing work.
- Please read these instructions carefully and retain for future reference.

BEFORE YOU BEGIN

- You must observe all local plumbing laws and codes.
- Do not install this valve if it does not meet local plumbing codes.
- Shut off the main water supply.

WATER TEMPERATURE

This product is to be used with water at a temperature range of 40˚F - 120˚F ONLY!

WATER PRESSURE

This product is to be used with a water pressure range of 15 PSI to 72 PSI ONLY

If water pressure is greater than 72 PSI install a pressure reducing valve (PRV)

Spring RD-380

Built-In Shower Head

aquatica®
Function, Form & Fashion

MOUNTING DIMENSIONS

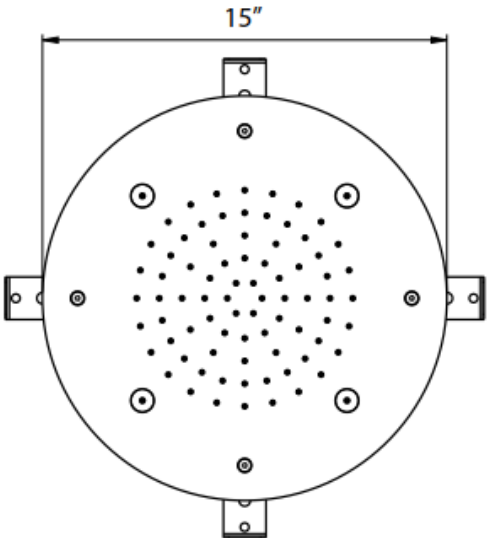

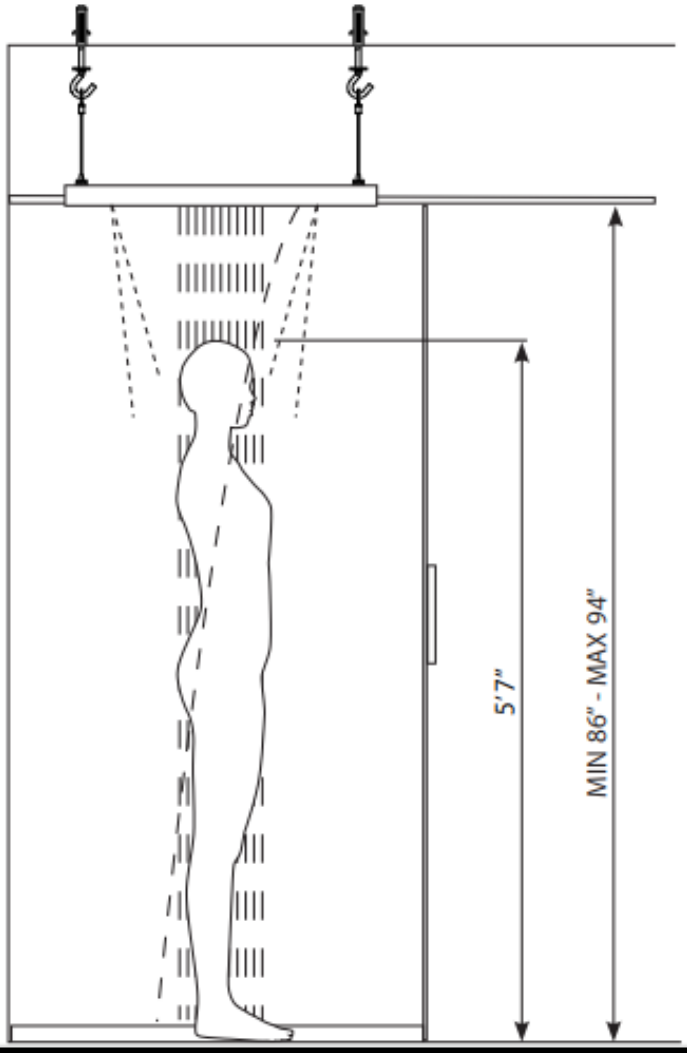

RAIN HEAD HEIGHT PLACEMENT

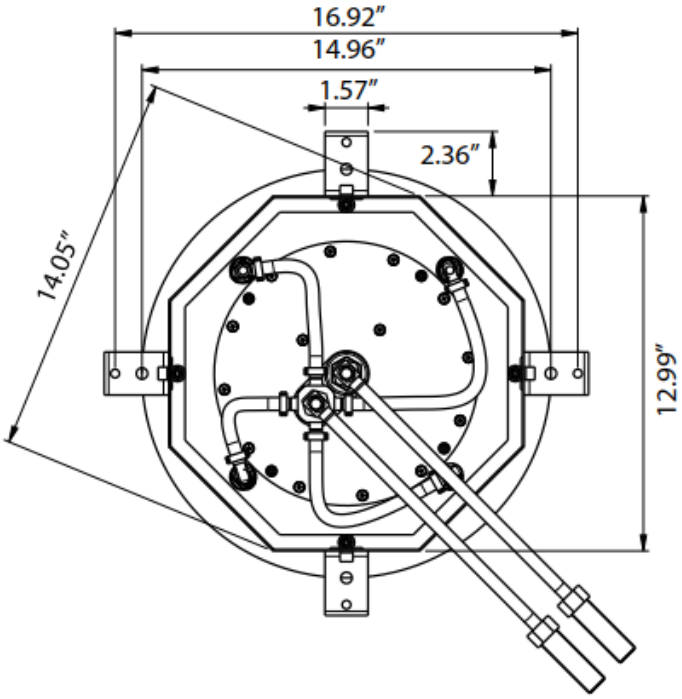

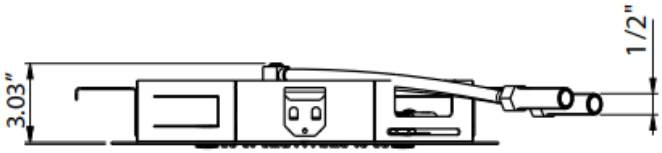

Spring SQ-380

Built-In Shower Head

MOUNTING DIMENSIONS

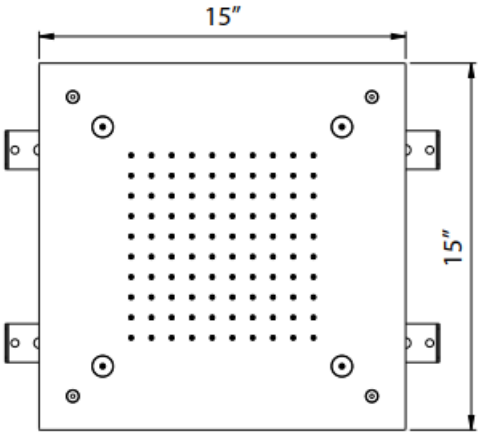

RAIN HEAD HEIGHT PLACEMENT

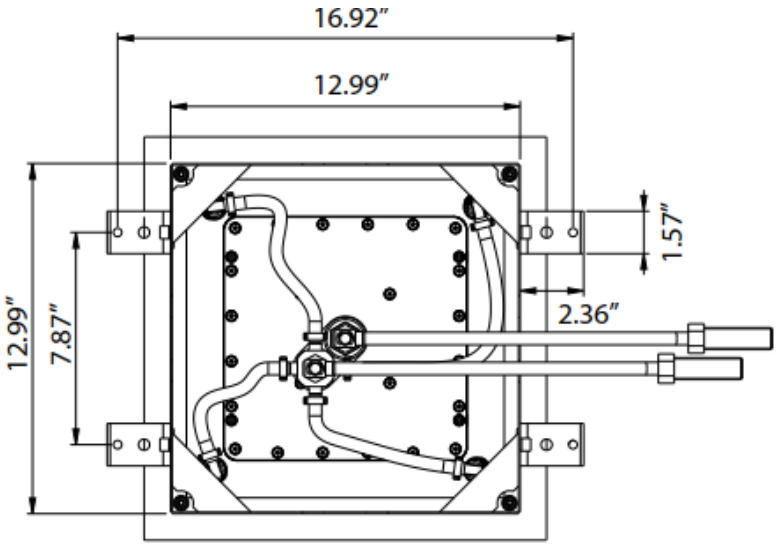

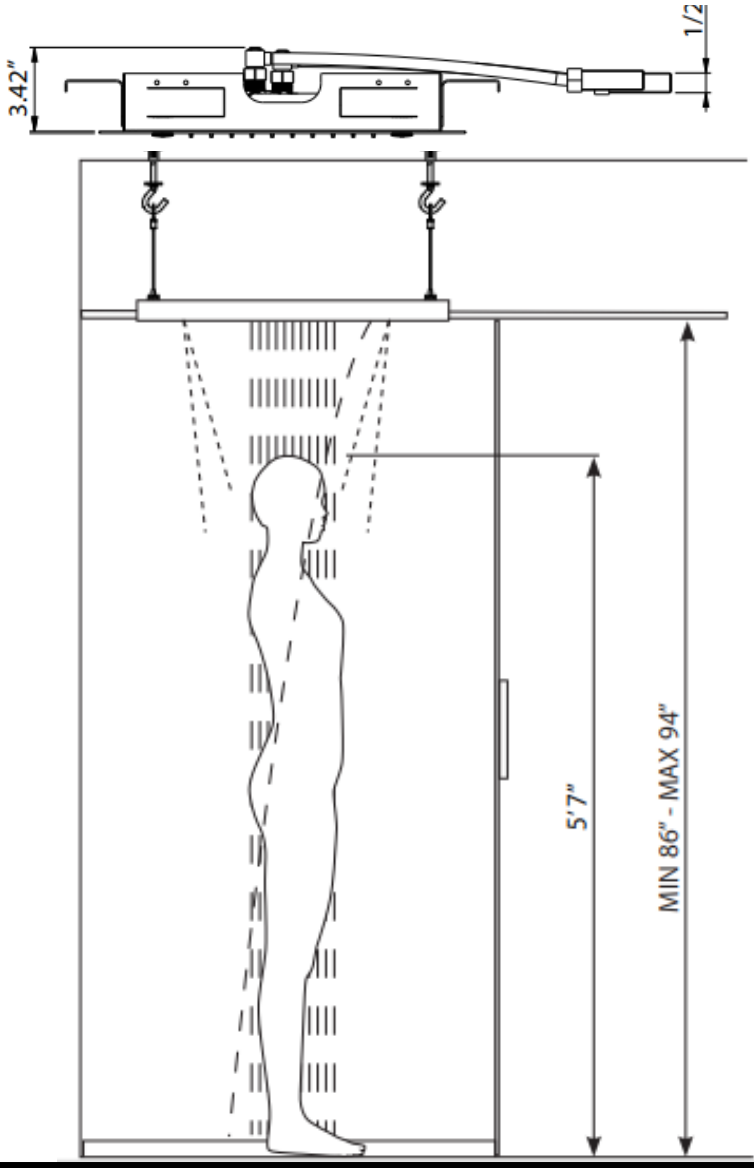

Aquaticausa.com
Aquaticabath.ca
E: info@aquaticabath.com

aquatica®
Function : Form : Fashion

Spring SQ-300

Built-In Shower Head

aquatica®
Function, Form & Fashion

MOUNTING DIMENSIONS

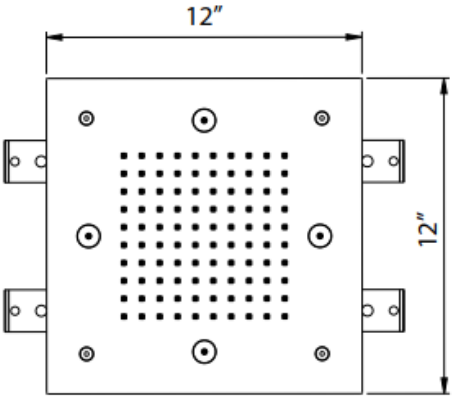

RAIN HEAD HEIGHT PLACEMENT

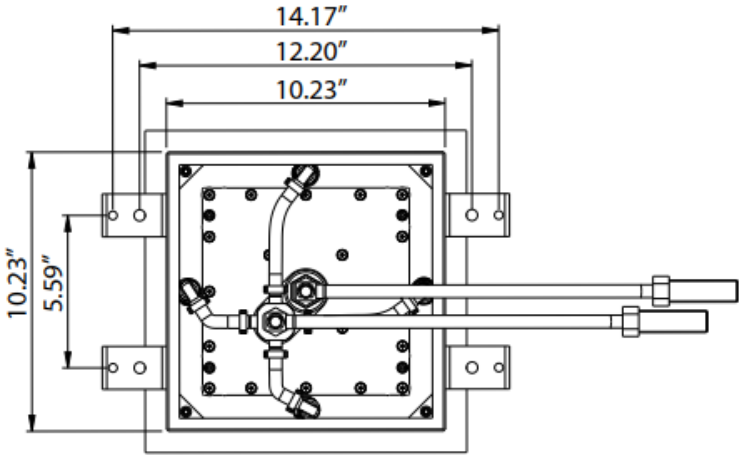

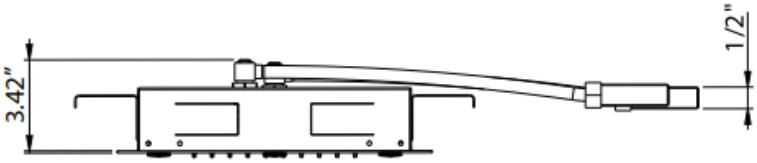

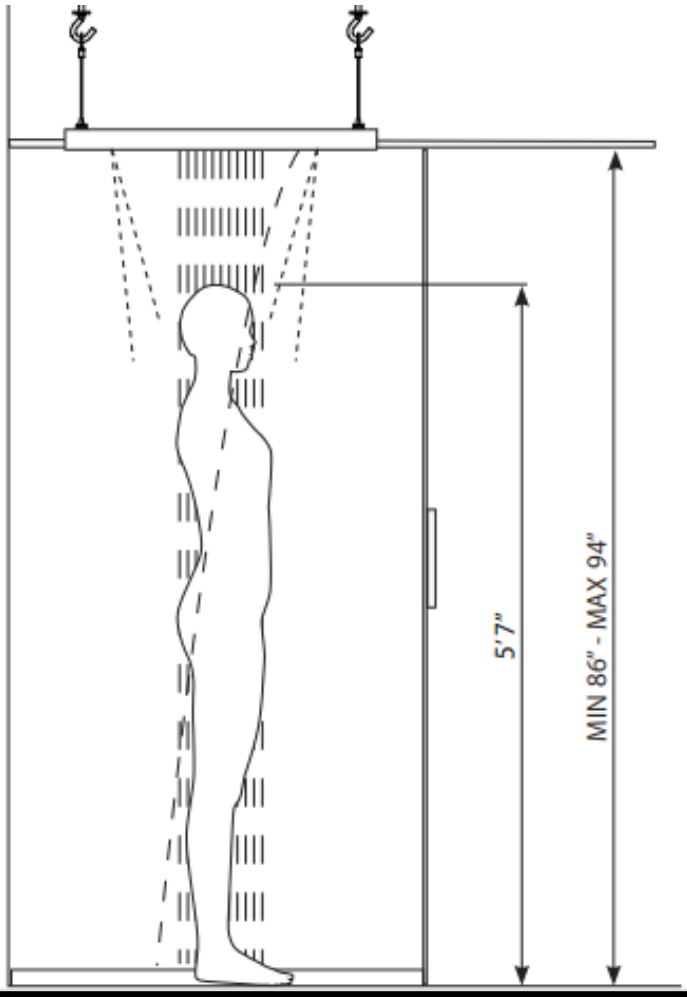

Aquaticausa.com
Aquaticabath.ca
E: info@aquaticabath.com

aquatica®
Function : Form : Fashion

Spring RD-380/SQ-380/SQ-300

Built-In Shower Head

INSTALLATION SEQUENCE

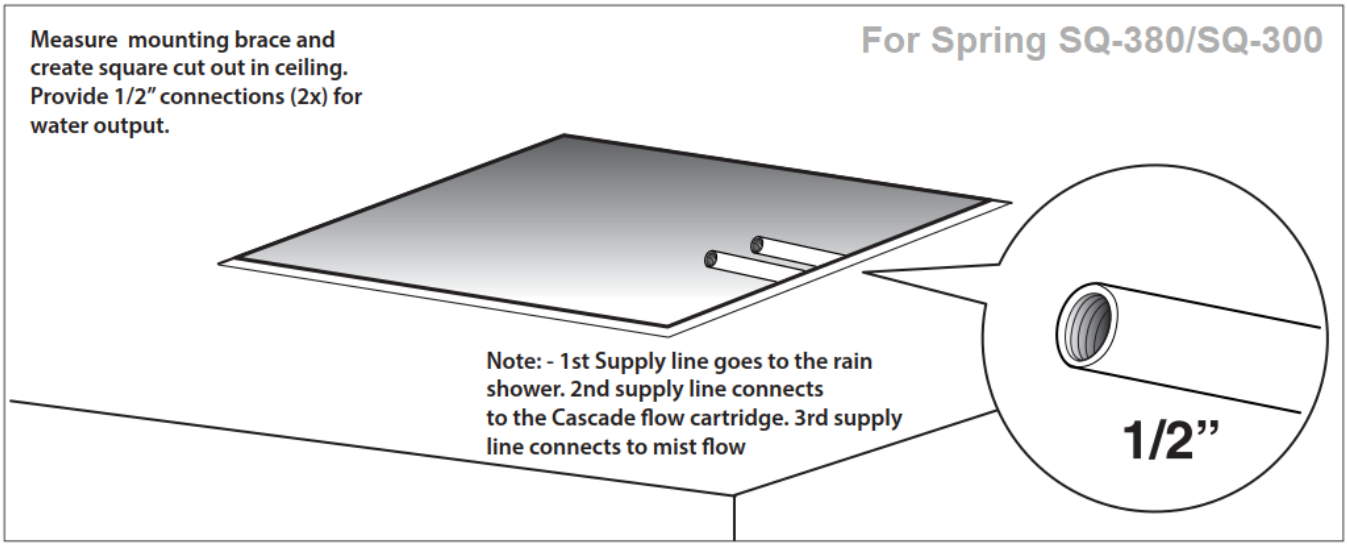

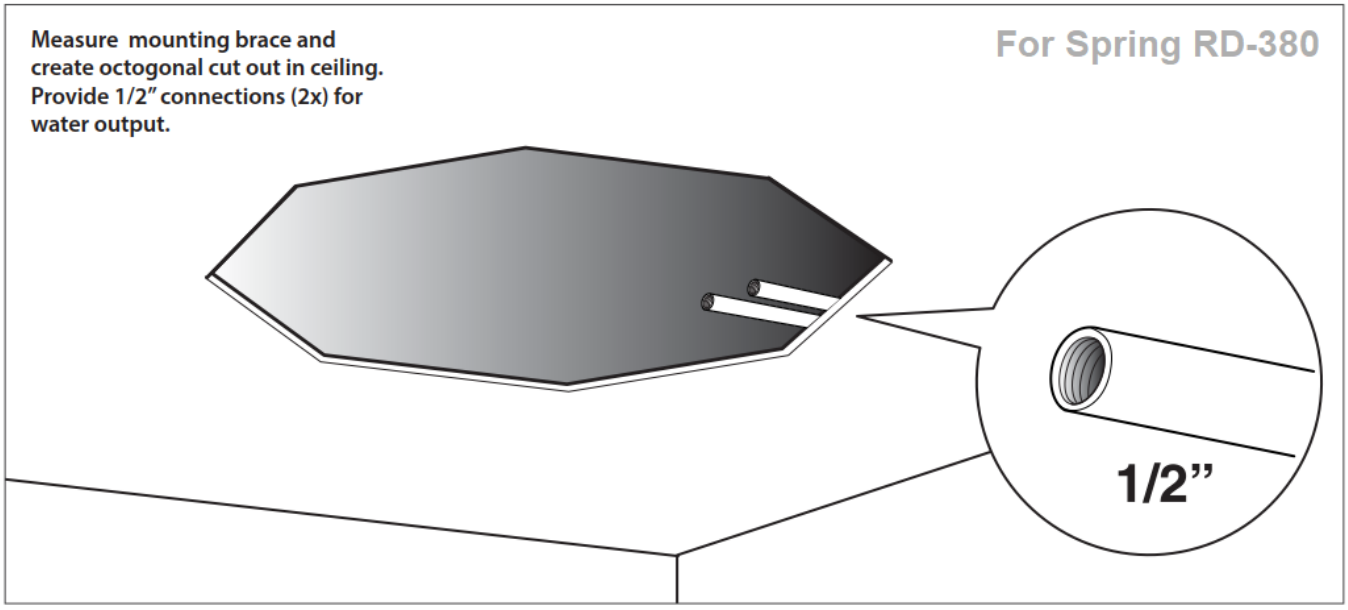

aquatica®
Function, Form & Fashion

INSTALLATION SEQUENCE continued

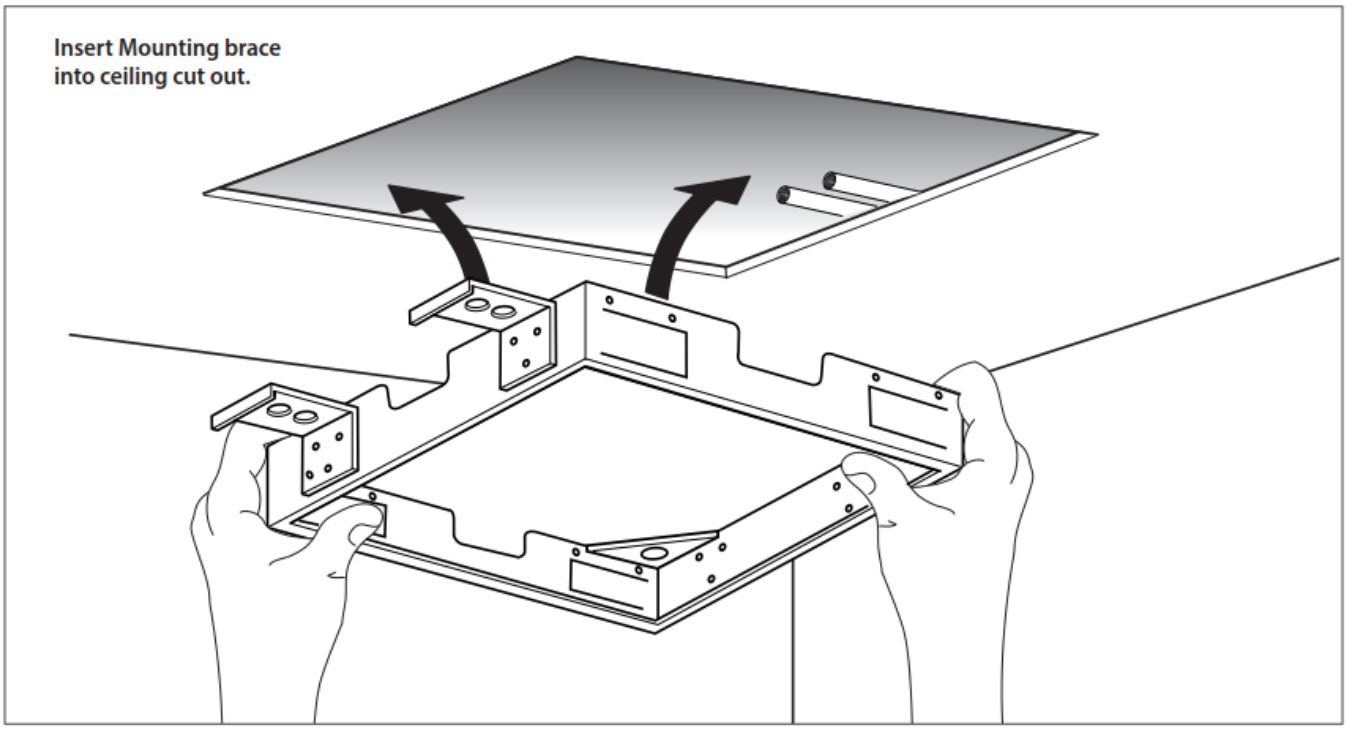

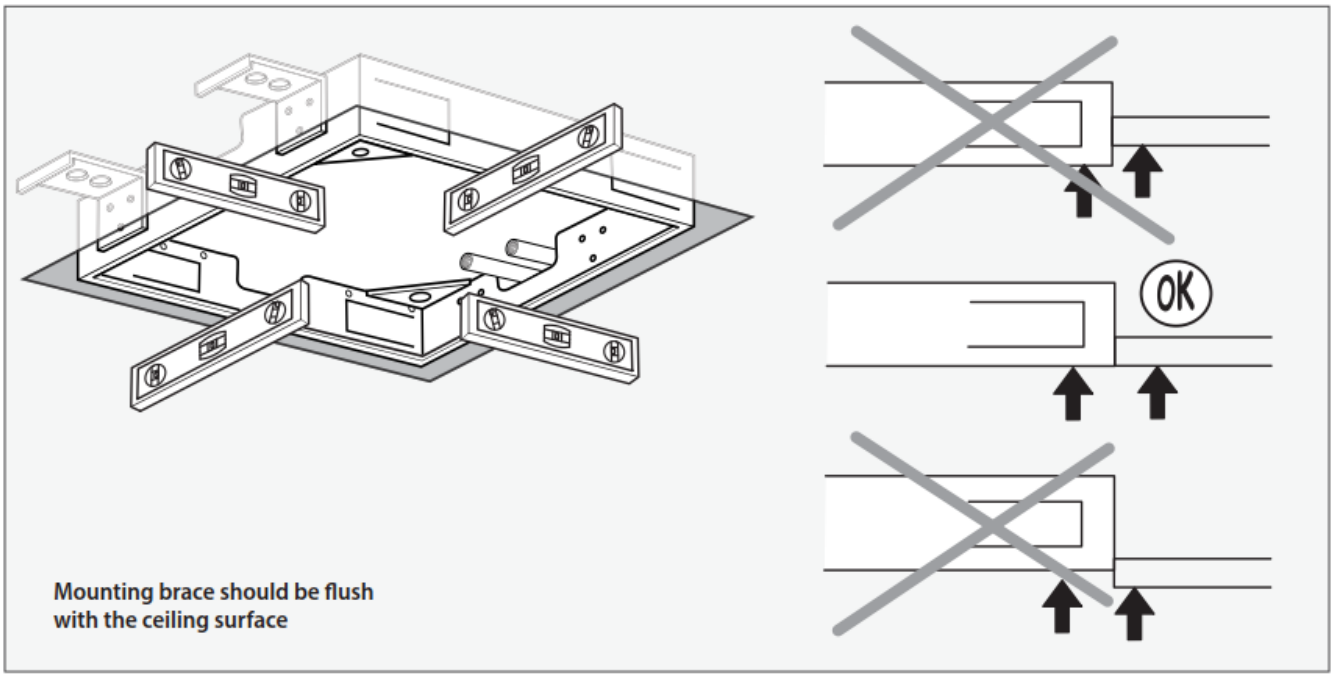

Spring RD-380/SQ-380/SQ-300

Built-In Shower Head

INSTALLATION SEQUENCE continued

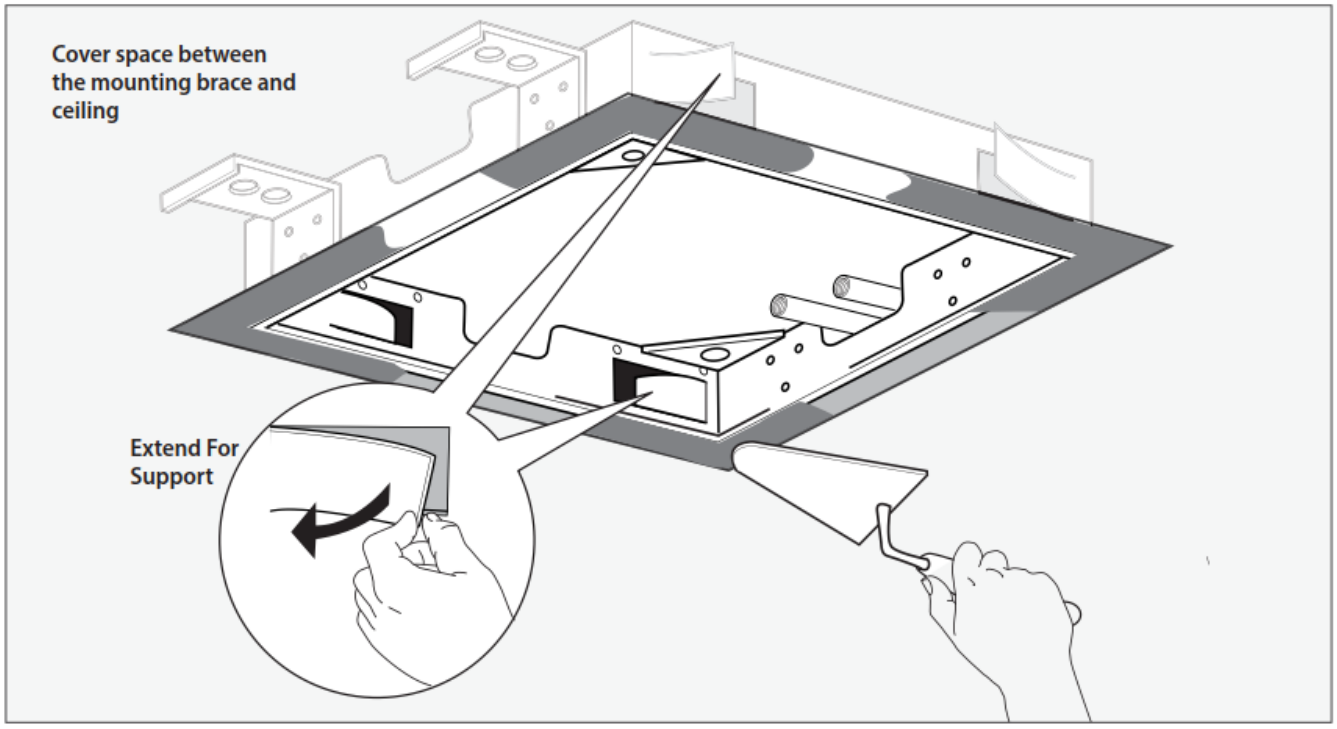

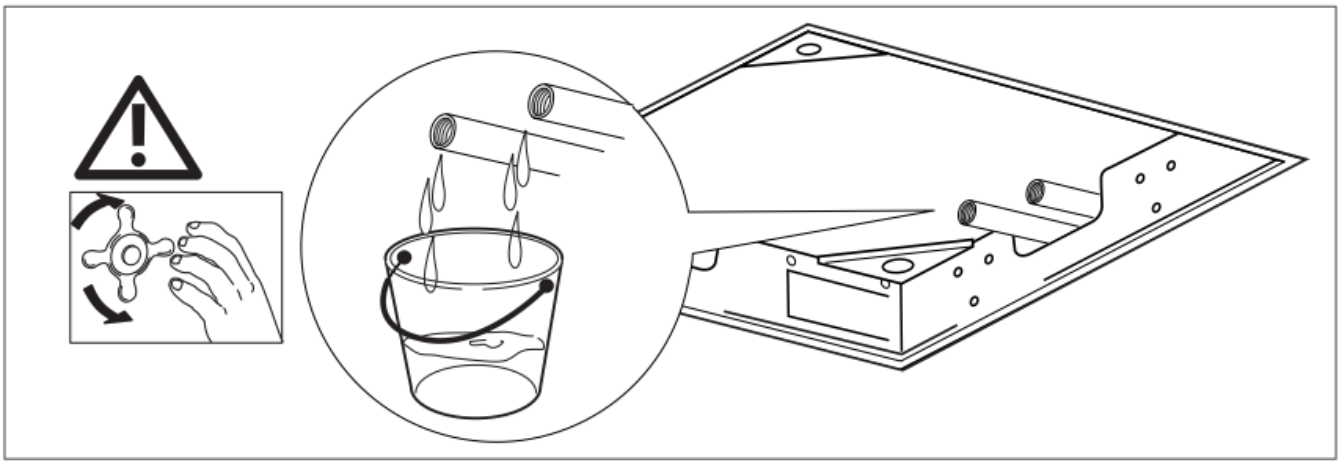

INSTALLATION SEQUENCE continued

Install Connectors

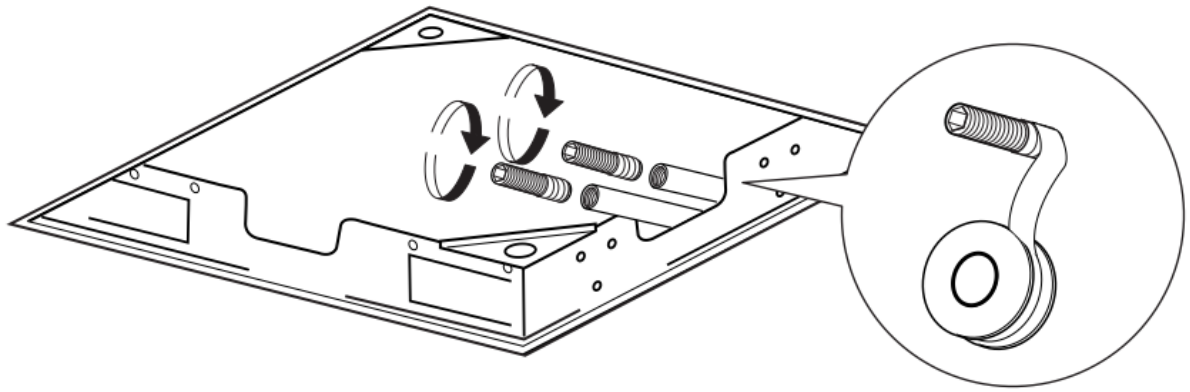

Install Hoses

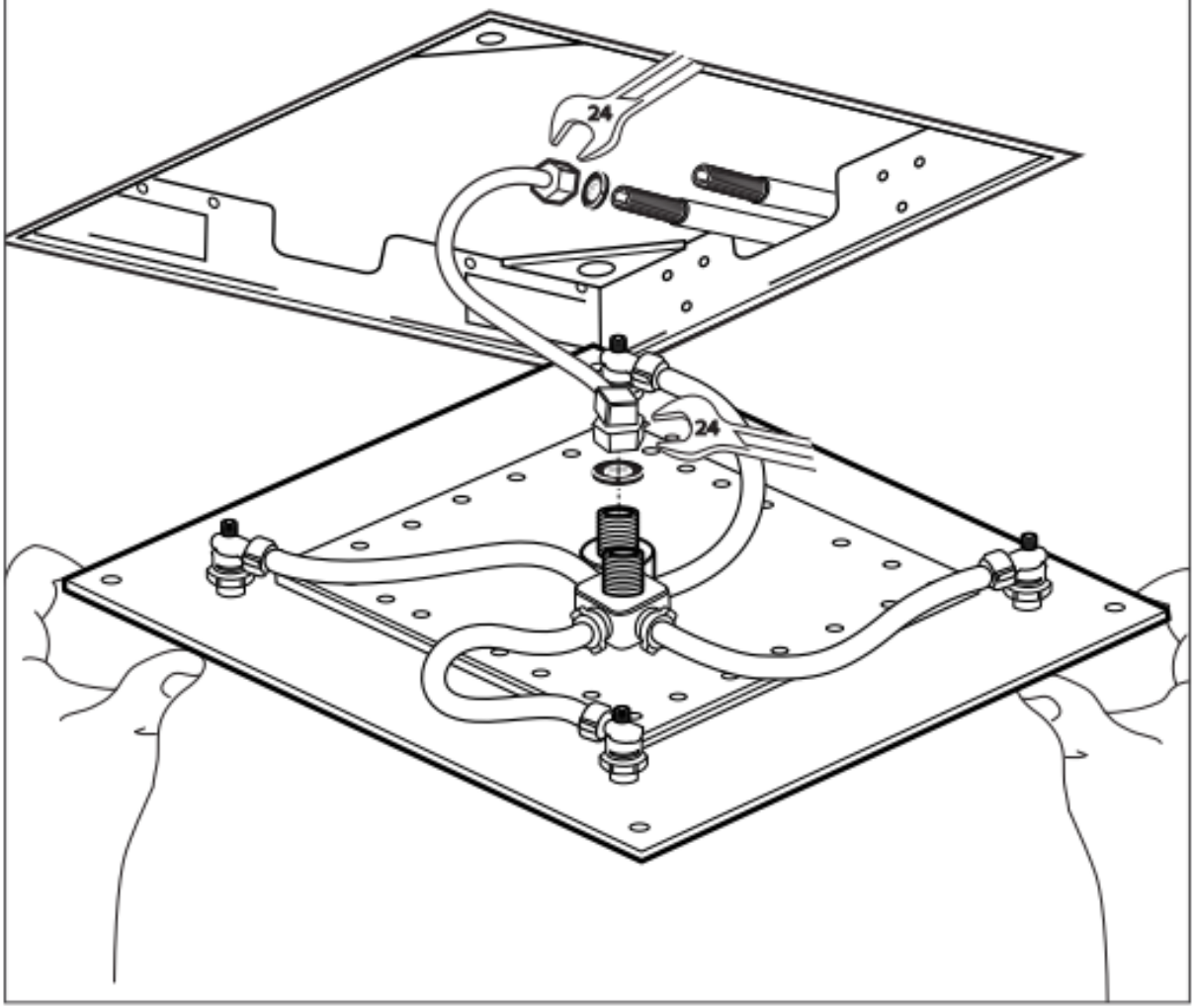

Spring RD-380/SQ-380/SQ-300

Built-In Shower Head

INSTALLATION SEQUENCE continued

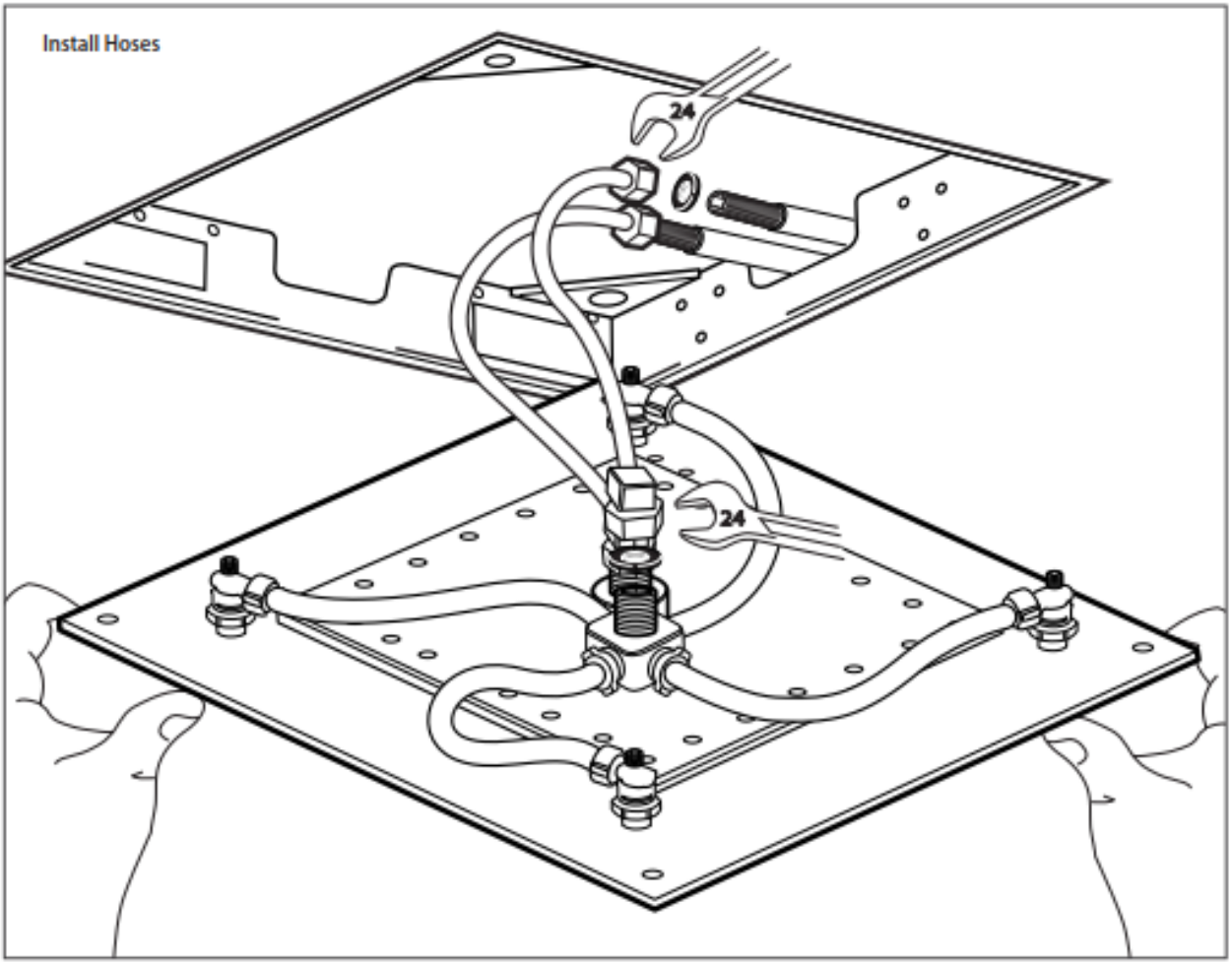

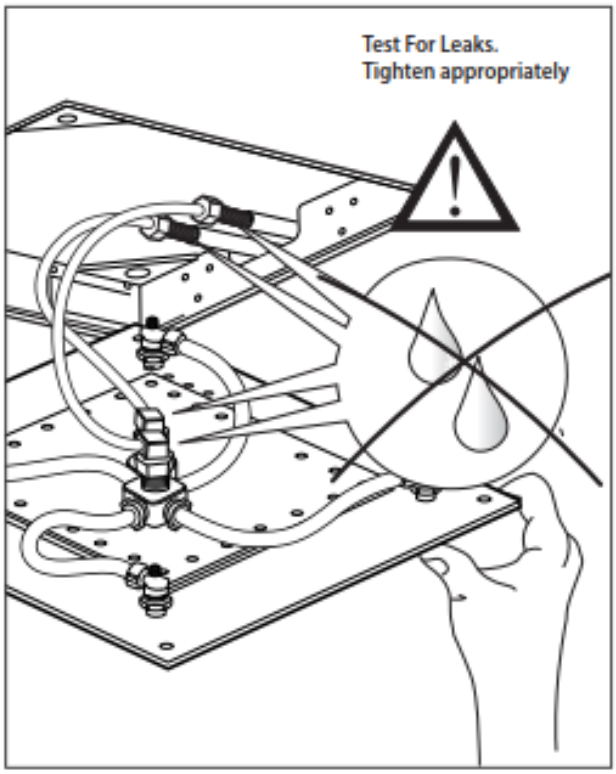

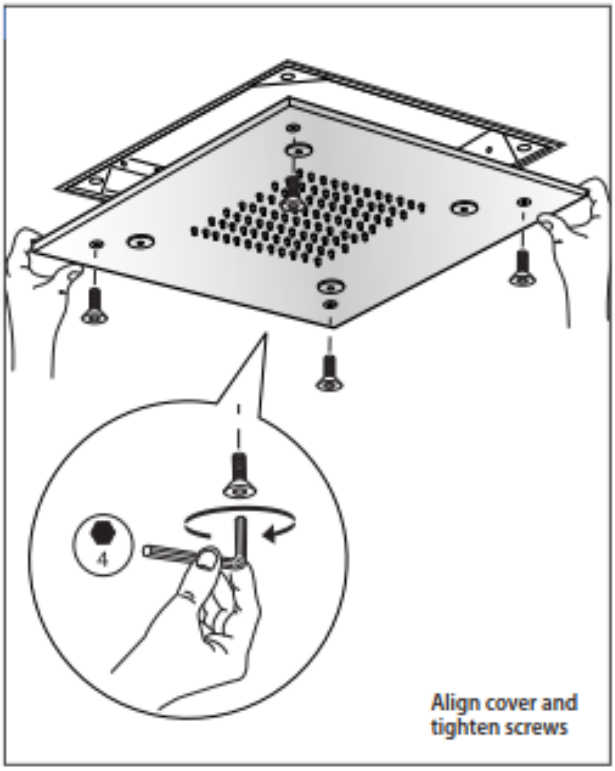

aquatica®

Function, Form & Fashion

CE

Aquatica Plumbing Europe LTD
Dzirnavu iela 73-2, Riga, Latvia
13
EN 14516
CL1
CA-DA